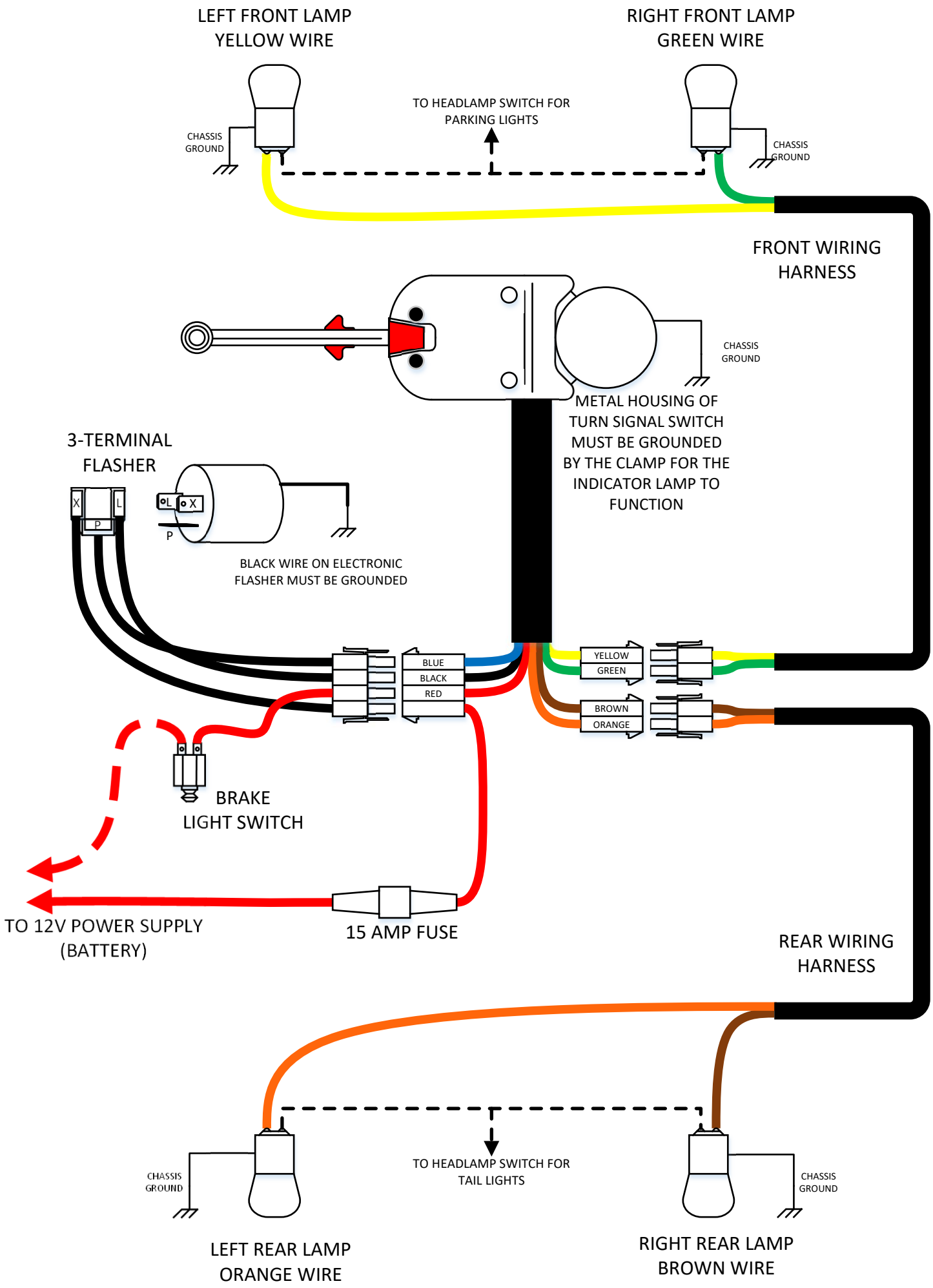
LEFT FRONT LAMP
YELLOW WIRE
RIGHT FRONT LAMP
GREEN WIRE
TO HEADLAMP SWITCH FOR
PARKING LIGHTS
CHASSIS
GROUND
CHASSIS
GROUND
FRONT WIRING
HARNESS
CHASSIS
GROUND
METAL HOUSING OF
TURN SIGNAL SWITCH
MUST BE GROUNDED
BY THE CLAMP FOR THE
INDICATOR LAMP TO
FUNCTION
3-TERMINAL
FLASHER
X
L
P
L
X
P
BLACK WIRE ON ELECTRONIC
FLASHER MUST BE GROUNDED
BLUE
BLACK
RED
YELLOW
GREEN
BROWN
ORANGE
BRAKE
LIGHT SWITCH
TO 12V POWER SUPPLY
(BATTERY)
15 AMP FUSE
REAR WIRING
HARNESS
TO HEADLAMP SWITCH FOR
TAIL LIGHTS
CHASSIS
GROUND
CHASSIS
GROUND
LEFT REAR LAMP
ORANGE WIRE
RIGHT REAR LAMP
BROWN WIRE